User Guide

Beta5C

Disclaimer:

The illustrations of products, accessories, and user interfaces in this manual are schematic diagrams for reference only. There may be slight differences between the actual product and the illustrations. Please refer to the actual product. This manual is published by the brand owner and may make necessary changes to correct any printing errors or inaccurate information in this manual without prior notice.

Version: V1.1

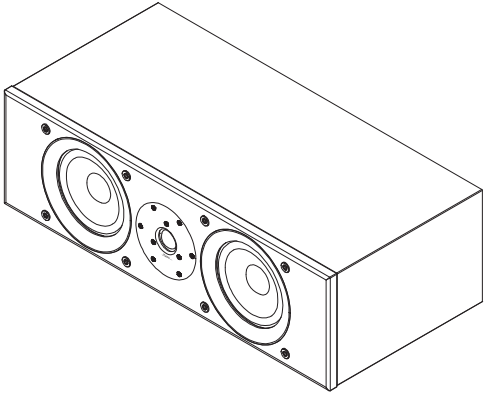

If service seems necessary contact the dealer from whom you purchased the speaker system. If that is not possible, email us at.

E-mail:service@starkesound.com

Starke Sound Inc. Gardena, CA 90248 ▪ www.starkesound.com

Slim Design, Full Expression

Beta5C serves as the voice of the Beta family in home cinema applications.

Equipped with dual 5.25-inch woofers and the same precision tweeter as its siblings, it is tuned for lifelike dialogue, tonal coherence, and dynamic presence.

Its robust cabinet and refined crossover ensure seamless integration across channels, anchoring the soundstage with focus and authority.

Beta5C makes every line clear, every moment vivid, and every movie unforgettable.

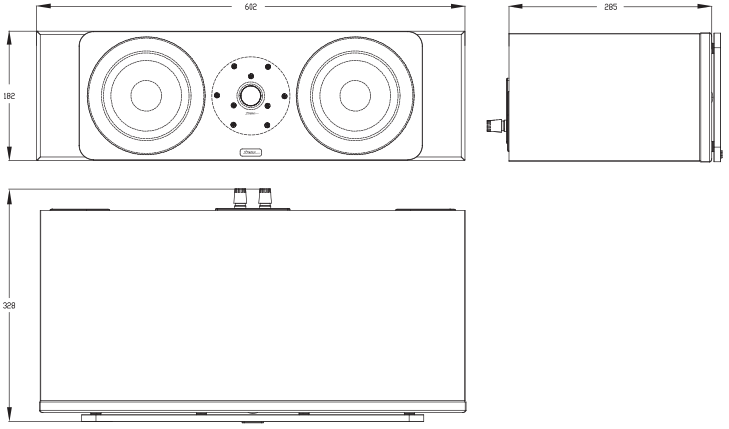

Technical Specifications

Max SPL output (1 m)	110 dB
Frequency response (-3 dB)	43 Hz-23 kHz
Recommended amplifier power	30-150w
Nominal impedance	4 ohms
Sensitivity (2.83v at 1m)	88 dB
Drivers	1.15 inch 5.25 inch x 2
Tweeter	1.15 inch silk dome tweeter
Bass driver	5.25 inch Carbon fiber Sanwich Drivers with HEMF technology
Cabinet Structure	Ported Box
Input terminals	Binding posts
Crossover	2 Way
Crossover points	1600 Hz
Grille	Cloth mesh over MDF Frame
Finish	Satin Painted Baffle with Wood Grain Finish
Color options	Shadow ash Black / Euro oak White / Aoki flaxen Grey
Full size	H 7.2 x W 23.7 x D 12.9 inches H 182 x W 602 x D 328 mm
Weight	25.6 lbs(11.6 kg) / each
Shipping size	L 27.9 × W 15.9 × H 12 inches / each Box L 708 × W 405 × H 305 mm / each Box
Shipping weight	32.6 lbs(14.8 kg)/ each
Warranty	8 years(from original purchase date)