DENAFRIPS

TERMINATOR 15th user's manual

Committed to providing high-quality HiFi audio solutions, delivering an exceptional auditory feast to customers worldwide

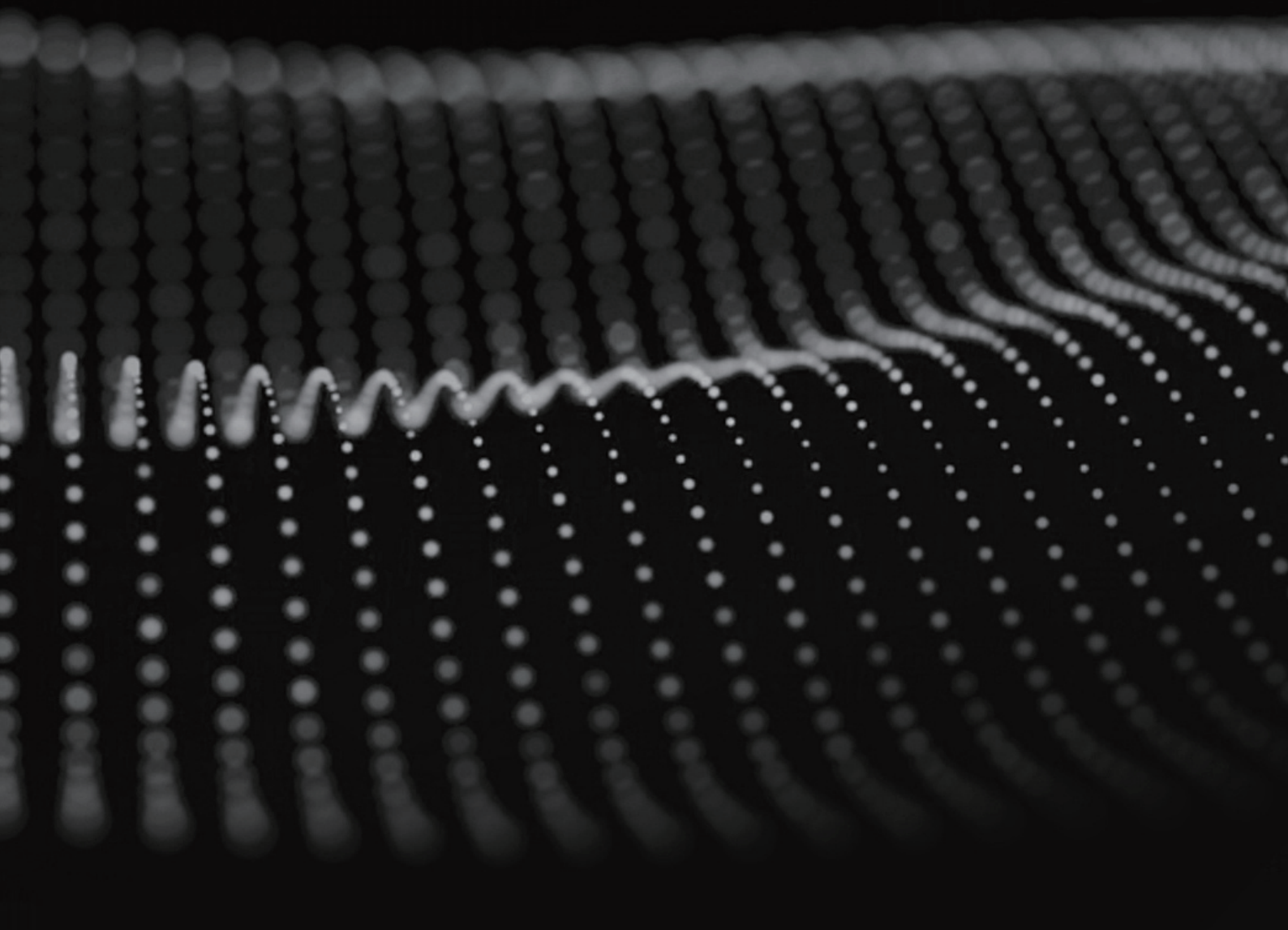

Table of Contents

Product Overview.....3

Function Panel Introduction.....8

Backplane Interface Introduction.....11

Technical specification.....13

Operation Settings.....15

USB Driver Installation.....22

Common Troubleshooting..... 23

After–sales service.....25

Important protective measures to note..... 29

Product Overview

Since its inception, the TERMINATOR series has been favored by music lovers for its excellent price/performance ratio and outstanding sound quality. The TERMINATOR 15th, the third iteration of the series, raises this benchmark to a new level. The upgrade focuses on a number of significant optimizations in terms of internal construction and sound performance.

1. Internal architecture and circuit optimization

The TERMINATOR 15th has been significantly optimized in terms of architecture, especially in terms of R2R architecture and circuit design. The use of fully balanced R2R circuits and high-speed multi-channel digital isolators ensures more accurate digital-to-analog signal conversion. The combination of multiple R2R array resistors and triggers achieves extreme accuracy during signal transmission, resulting in even better sound quality performance. In addition, the dual power supply system with a high-quality LDO chip ensures power stability and further enhances signal transmission efficiency and reliability.

2、Precise clock system and power supply design

To ensure the accuracy of the clock, TERMINATOR 15th designed a separate clock board with two special high-precision customized thermostatic crystals, along with a separate shielded box and gold screws, which provide protection for the clock signals as well as enhance the overall stability of the device. These design details ensure the proper operation and high efficiency of the FPGA algorithms, enabling them to accurately handle multiple sample rates and audio formats.

In terms of power supply design, the TERMINATOR 15th utilizes dual O-shape transformers, dual power supply rectifier filter circuits and high-quality WIMA and EPCOS capacitors to completely isolate interference between power supplies, further improving the purity of sound quality and the durability of the unit.

3. Sound quality performance

The TERMINATOR 15th is particularly good in terms of sound quality. The low-frequency part is elastic and powerful, the mid-frequency performance is full, and can truly restore the details and layers of music; the high-frequency part is transparent and natural, without the slightest sense of sharpness, which is suitable for a long time listening. This delicate and balanced sound quality makes the TERMINATOR 15th show excellent performance in a variety of music styles, whether it is the delicate performance of classical music or the low-frequency energy of electronic music, all can be fully reflected.

4. Product List

If you do not purchase additional products, when you receive the goods, the package only contains the machine itself, without the power cord and remote control.

Functional Features
①. Proprietary R2R architecture. ②. True fully balanced 26bit R2R + 6bit DSD (32 stage FIR filter). ③. Multiple high-precision resistors are used in the R2R line. ④. Special 45.1584MHz, 49.152Mhz high-precision active crystal with low phase noise. ⑤. Adaptive FIFO clock buffer. ⑥. Optimized FPGA digital signal processing algorithm. ⑦. USB and I2S input audio source sample rate up to DSD1024, PCM1536KHz. ⑧. USB audio solution is realized by high-speed ARM MCU. ⑨. Licensed Thesycon USB driver for Windows platform. ⑩. No driver is required for Mac and Linux. ⑪. 7 types of digital input sources, of which AES can be humanized to single & dual AES input mode. ⑫. Fast/slow roll-off filter is selectable.

Functional Features

⑬. The I2S input pin has 8 modes to choose from, which is perfectly compatible with all major brands of audio sources and DDC devices on the market.

⑭. When I2S plays DSD signals, you can swap the left and right channels through the function settings.

⑮. Digital reception processing and R2R circuit part, each adopts a toroidal transformer to provide superb power supply capability, and adopts multiple low-noise LDOs.

⑯. The unit has customized high quality electrolytic capacitors, and a variety of incoming complementary film capacitors.

DSD

①. OPT, COAX, AES support DSD64-DoP.
②. USB and I2S inputs support up to DSD1024.

PCM

①. OPT, COAX, AES support 44.1KHz-192KHz.
②. USB input supports 44.1KHz-1536KHz.
③. I2S input supports 44.1KHz-768KHz.

Sampling mode

Original Bit Rate NOS/Oversampling OS

Clock output

①. Support: 45.4584MHz clock output
②. Support: 49.152MHz clock output

Function Panel Introduction

Figure 1

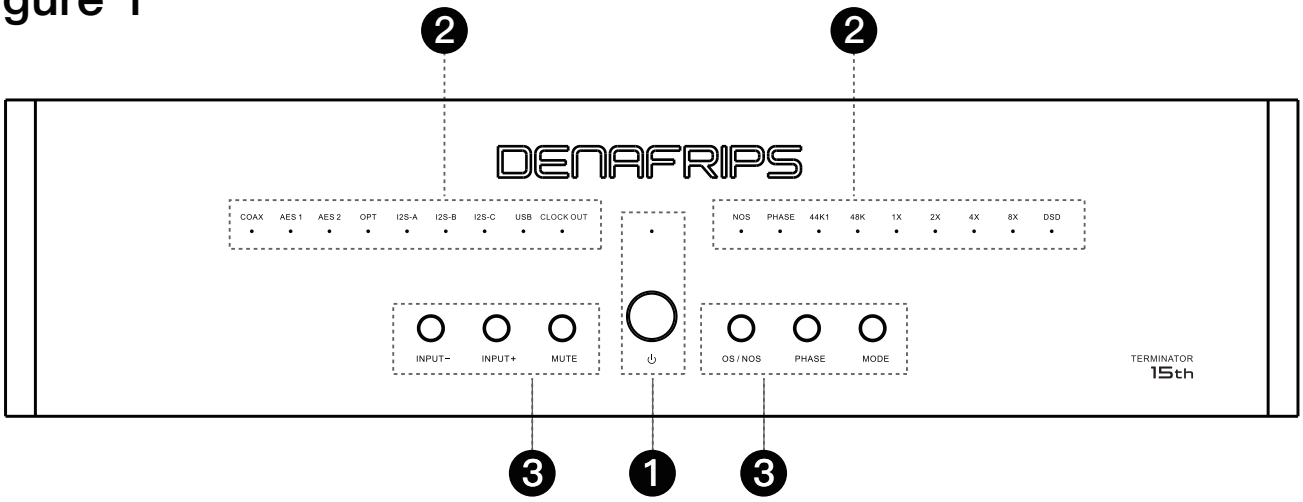

❶. Standby buttons and indicators ⏻

When the power of the unit is turned on, the standby indicator light is on, indicating that it is in standby mode. Press the standby button, the standby indicator goes off and the DAC starts to work.

❷. Indicators on the DAC panel (showing input source, sample rate, octave, audio format and mode).

a. Signal source indicators: COAX, AES 1, AES 2, OPT, I2S–A, I2S–B, I2S–C, USB. These indicators indicate the different input ports. When an input source is selected, the corresponding indicator lights up.

b. Sample rate indicator: 44.1K (44.1 KHz sample rate); 48K (48 KHz sample rate). These indicators indicate the current sample rate of the input audio signal.

c. Multiplier Indicators: 1X (original sample rate);
2X (2 times the sample rate); 4X (4 times the sample rate);
8X (8 times the sample rate). These indicators indicate the current multiplier frequency of the input audio signal (e.g., a multiple of the original sample rate, as described in the chart below).
d. Audio format indicator: DSD when the light is on, PCM when the light is off.
e. OS/NOS indicator: NOS when the light is on, OS when the light is off. In OS mode, the DAC processes the incoming digital audio signal to increase the sampling rate. Oversampling improves audio quality by adding more data points through interpolation algorithms.In NOS mode, the DAC processes the input digital audio signal directly without any sample rate processing. This mode preserves the original characteristics of the audio signal.
f. PHASE Indicator Light: When the light is on, it is inverted phase; when the light is off, it is in-phase.
g. CLOCK OUT indicator: When the light is on, it indicates that the DAC is outputting clock signals. These clock signals can be used to synchronize other audio devices.
This ensures that all devices are using the same clock source, thus reducing jitter and other timing problems and improving the overall performance of the audio system.

❸. Control key

a. INPUT–, INPUT+, PHASE, OS/NOS, MUTE, MODE. press these buttons for direct control of the audio input source, phase, sample mode, mute, and operating mode.

b. Description of each key

INPUT– button: Selects or switches to the previous input source.

INPUT+ button: Selects or switches to the next input source.

PHASE Button: It is a phase selection switch. When this button is pressed, the PHASE light in Figure 1 turns on, indicating inverted phase output; when the light is off, it indicates in–phase output.

OS/NOS button: Source and oversampling selection on/off button, when this button is pressed, the NOS lamp in Figure 1 will be NOS when it is on, and OS when it is off.

MUTE button: When this button is pressed, all source indicators flash.

MODE button: Used to switch between different preset modes.

Backplane Interface Introduction

Figure 3

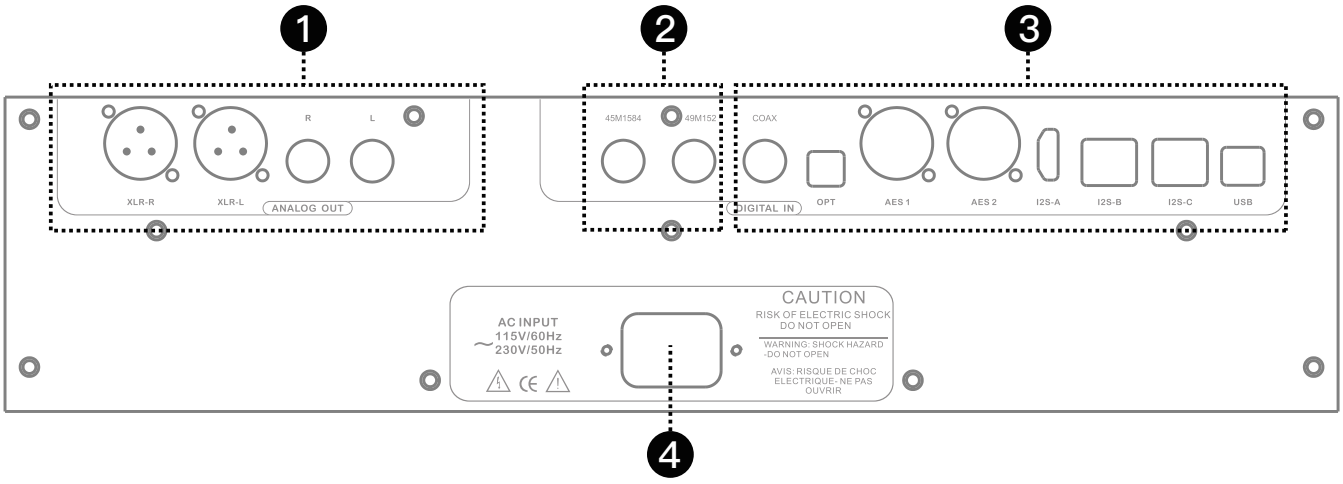

❶. Analog audio signal output area, this unit has a pair of XLR outputs, a pair of RCA outputs, according to your equipment, choose the appropriate output.

XLR–R: Analog signal right channel balanced output.
XLR–L: Analog signal left channel balanced output.
RCA–R: Unbalanced right channel analog signal output.
RCA–L: Unbalanced left channel analog signal output.
Note: The outputs of the RCAs are connected in parallel to the positive end of the XLRs. In order not to affect your listening experience, we do not recommend that you use both the RCA and XLR outputs at the same time.
For the best fit and to avoid any risk of damaging the RCA socket, we recommend using RCA cables with an inner pin diameter not exceeding 3.2 mm

❷. Clock Output Interface

45M1584 and 49M152: Clock output interfaces for synchronization and transmission of high-precision clock signals. Synchronization of clock signals is essential to reduce jitter and improve audio quality. Clock synchronization between different devices ensures that digital audio signals remain consistent during transmission and processing, reducing signal distortion.

❸. Digital Audio Input Interface

There are a total of 8 input interfaces, namely COAX, OPT, AES 1, AES 2, I2S-A, I2S-B, I2S-C, and USB.

COAX: (Coaxial) digital interface, interface transmission is stable, suitable for short distance connection, provides high audio quality.

AES1: Digital balanced input connector, input impedance 110 ohms (the unit can be set up as a single-mode input or as a dual-mode input, see the above function setup description method for details).

AES2: Digital balanced input connector, input impedance 110 ohms (the unit can be set up as a single-mode input or as a dual-mode input, see the above function setup description method for details).

Technical specification

Figure 2

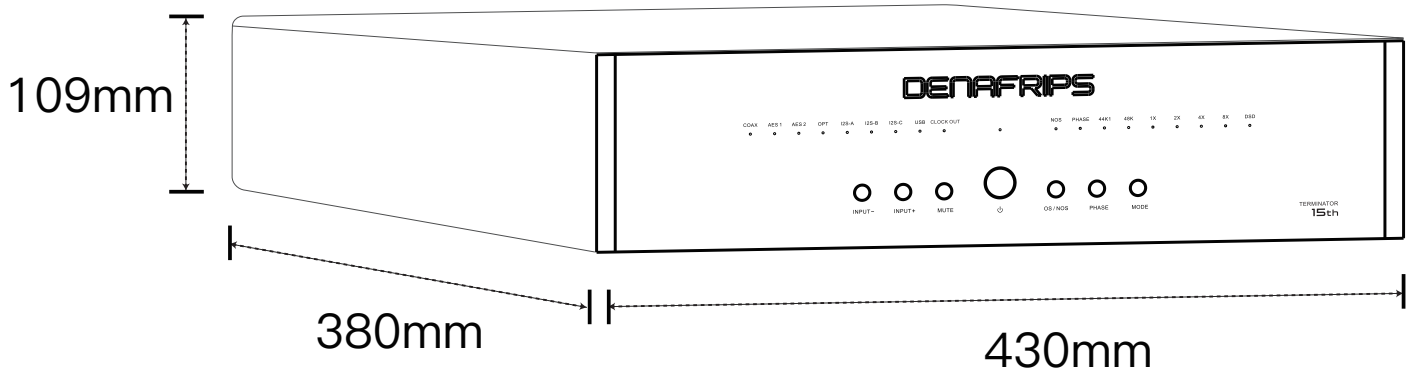

(OPT Input Test)

Analog Output:	RCA at 2.2Vrms, 625Ω XLR at 4.4Vrms, 1250Ω
Frequency Response:	20Hz–40KHz (+1/–0.2dB)
Distortion:	＜0.002%(A–weighting)
Signal–to–noise ratio:	⩾120dB(A–weighting)
Dynamic Range:	⩾132dB
Stereo crosstalk:	⩾–110dB
AC Power Requirements:	115V/60Hz 230V/50Hz (Global voltage, automatic selection)
Power Consumption:	⩽20W
Machine Dimensions:	430W x 380D x 109H mm(Includes feet)
Outer package dimensions:	610x 570 x 275 mm
Package Contents:	Electronic manual and warranty card
Net weight:	18.75 kg

The relationship between the sampling rate of the input audio signal and the display of the panel indicators is shown in Table 1 below.

Basic Sampling Rate	Multiplier	Input format
44.1 KHz	1X	44.1 KHz
	2X	88.2 KHz
	4X	176.4 KHz
	8X	352.8 KHz
	16X = 2X + 8X	705.6 KHz
	32X = 4X + 8X	1411.2 KHz
48 KHz	1X	48 KHz
	2X	96 KHz
	4X	192 KHz
	8X	384 KHz
	16X = 2X + 8X	768 KHz
	32X = 4X + 8X	1536 KHz
DSD	1X	DSD 64
	2X	DSD 128
	4X	DSD 256
	8X	DSD 512
	16X = 2X + 8X	DSD 1024

Operation Settings

Function Setting	Procedure
A. USB upgrade settings	1. First, download the USB upgrade firmware from the official website, open the storage location on your computer, and find the ***.bat file. 2. Connect the device to the mains power and set it to standby mode, with only the standby light on. 3. Connect one end of the USB cable to your computer and the other end to the device's USB audio source port. 4. Open the ***.bat file on your computer, and the upgrade interface will appear. 5. Select USB input when the device is powered on, then press the standby button to enter standby mode (the standby light will be on). Press the MODE button again to enter the upgrade state and start firmware upgrading. After the USB firmware upgrade is successful, the message "Firmware burning successful" will be displayed on the computer interface. 6. Unplug the power cable, then plug it back in. The device will be in standby mode. Press the standby button to start the device, and the USB firmware upgrade will be completed successfully.
B. Dual AES Function Settings	1. Press the MUTE button to enter the menu mode, then press the INPUT+ button to access the Dual AES Function Settings. At this point, the USB light and CLOCK OUT light will turn on. 2. Press the INPUT+ button again in the Dual AES Function Settings to switch modes: – AES2 light on = Dual AES mode; – OPT light on = Single AES mode;

Function Setting	Procedure
C.Filter Function Settings	1.Press the MUTE button to enter menu mode, then press the MODE button to enter filter function settings(Press MUTE + MODE buttons) → 8x Light on. 2.In filter function settings, press the MODE button to switch between fast roll-off and slow roll-off(Press the MODE button to switch) 1x Light off： Fast roll-off 1x Light on： Slow roll-off
D. Clock output function setting	1. Press the MUTE button to enter the menu mode, then press the INPUT- button to access the Clock Output Function Settings. At this point, no lights will be on when there is no clock output; when there is a clock output, the CLOCK OUT light and the light corresponding to the clock will turn on. 2. Press INPUT- again in the Clock Output Function Settings: - CLOCK OUT light on + COAX light on: Outputs a word clock with the same sampling rate as the input signal; - CLOCK OUT light on + AES1 light on: Outputs a word clock; - CLOCK OUT light on + AES2 light on: Outputs half of the master clock; - CLOCK OUT light on + OPT light on: Outputs the master clock.

Function Setting	Procedure
E. Selection Oversampling Rate / Original code rate	1. Press the OS/NOS button 2. NOS indicator on = original code rate, NOS indicator off = oversampling rate
F. Sound Source Selection	COAX, OPT, AES 1, AES 2, I2S–A, I2S–B, I2S–C and USB.Press these buttons to select the input source and the corresponding source indicator will light up.If a device has more than one audio source input, press the corresponding audio source input button and the indicator lights up to indicate successful switching.
G. I2S DSD Channel Switching Configuration	1. Select the I2S–A input 2. Press the MUTE button to enter configuration mode. 3. Switch the NOS button momentarily (within 2s) to realize DSD left and right channel swap. – COAX light on means L/R – AES1 light on means R/L 4. Wait for 10 seconds. 5. DAC returns to its original state.

Function Setting	Procedure
H. I2S Pin Configuration (Note: configure the pins after turning down the volume)	Key: Please first determine the I2S PINOUT pinout diagram, and then determine what kind of wire sequence mode in the 1–8 modes of the I2S in the following figure (the LEDs indicate binary 000–111, “○” indicates that the light is off and “●” indicates that the light is on), and pay attention to the 3 lights on and off. Note that the three lights are on andoff, and the machine is factory configured for mode “1” state. 1. Select I2S Input 2. Press the MUTE button to enter the configuration mode. 3. After pressing PHASE button momentarily (within 2s), the 1X , 2X , 4X lamps will be on/off, after pressing PHASE button repeatedly again, these 3 lamps will be on/off in a fixed mode, you can stop the operation immediately after selecting the required matching mode (see I2S pin diagram for details), if you miss the required mode, follow the above steps to do it again. 4. Wait for 10 seconds. 5. The I2S setting of DAC is successful, and other functions are restored to their original state.

Table 3: I2S Pin Diagram (The machine is shipped in mode ‘1’, all lamps are off, ‘○’ = lamps off, ‘●’ = lamps on)

Mode	LED on & off Relationship Diagram		
	1X	2X	4X
	DATA	BCK	LRCK
1	○	○	○
2	●	○	○
3	○	●	○
4	●	●	○
5	○	○	●
6	●	○	●
7	○	●	●
8	●	●	●

I2S PINOUT						
PIN	DATA		BCK		LRCK	
Mode	1		4		7	9
1	DATA–	DATA+	BCK+	BCK–	LRCK–	LRCK+
2	DATA+	DATA–	BCK+	BCK–	LRCK–	LRCK+
3	DATA–	DATA+	BCK–	BCK+	LRCK–	LRCK+
4	DATA+	DATA–	BCK–	BCK+	LRCK–	LRCK+
5	DATA–	DATA+	BCK+	BCK–	LRCK+	LRCK–
6	DATA+	DATA–	BCK+	BCK–	LRCK+	LRCK–
7	DATA–	DATA+	BCK–	BCK+	LRCK+	LRCK–
8	DATA+	DATA–	BCK–	BCK+	LRCK+	LRCK–

HDMI I2S Input Diagram

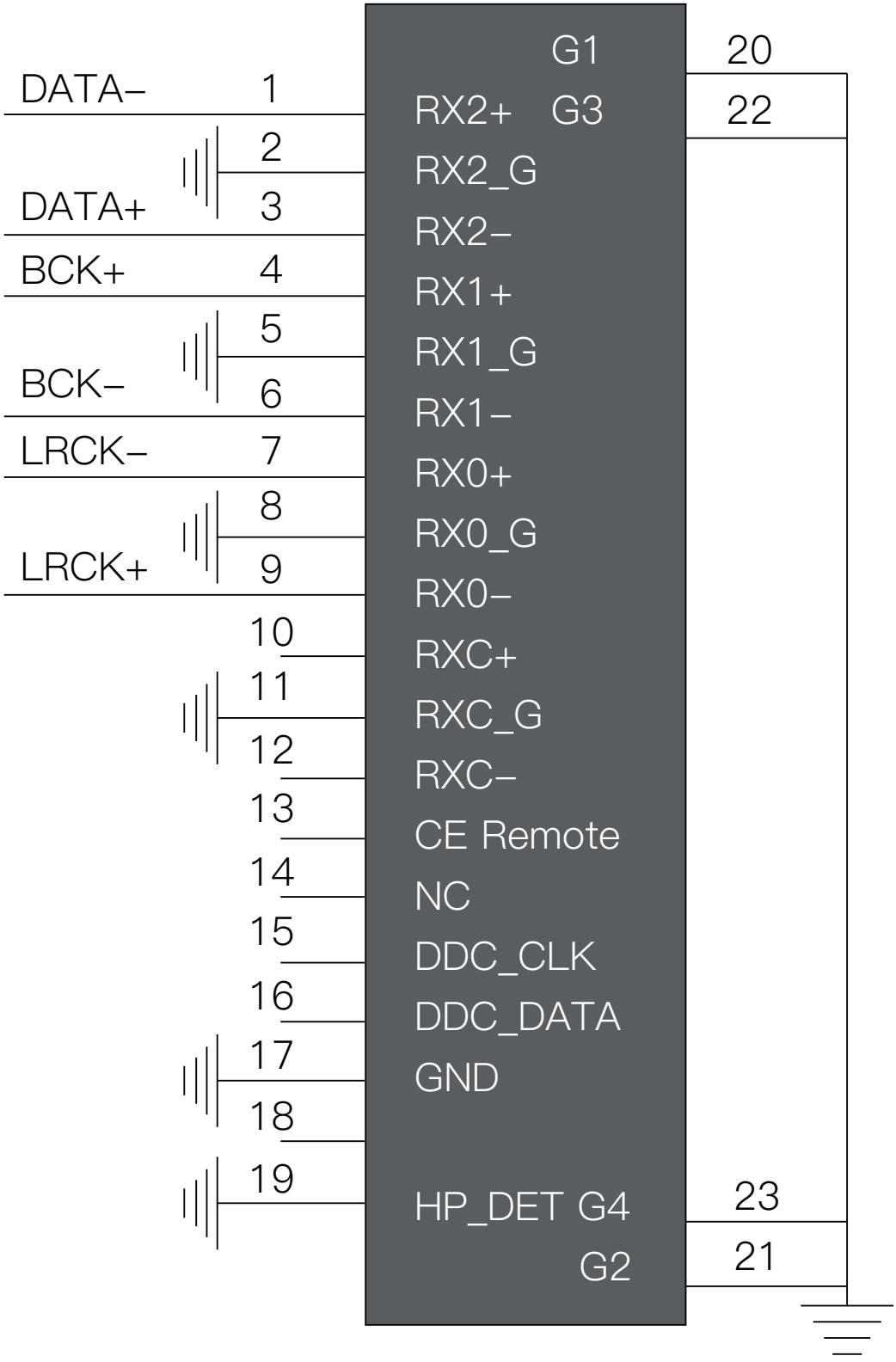

OPT: OPT digital input interface.
I2S–A, I2S–B, I2S–C: I2S (HDMI standard cable) input interfaces. The pinout may vary among different manufacturers. This device offers 8 pinout options to match various manufacturers; please refer to the function settings instructions for details.
Note: Do not plug or unplug this cable while the device is powered on, as static electricity may damage the product.
USB: (Universal Serial Bus) interface, the interface provides convenient digital audio transfer, allowing high fidelity audio data transfer for connecting to PCs, Macs, and a variety of digital audio devices.

❹. Power Input Connector

This unit is a Class I device and requires a 3–core power cord, and you need to ensure that the power supply is well grounded; by using the power input connector correctly, you can ensure that the DAC unit receives stable and reliable power support.

USB Driver Installation

USB Driver Installation – The USB driver is required for Windows operating systems (win10 or above only, for versions below win10 refer to the official website for detailed instructions). The USB driver is licensed by THESYCON and is designed to provide the highest quality audio playback for computer audio systems.
Note: Mac and Linux operating systems do not require a USB driver.

Installation Guide

1. Do not connect the USB cable from your computer to the DAC. unplug it before the USB driver is installed.
2. Download the driver from the support page at https://www.denafrips.com/download-thesycon.
3. Double-click the driver on your computer → Follow the on-screen instructions to complete the installation
4. Restart your computer → Connect the USB cable to the DAC → Find the driver icon in the bottom right corner of your computer
5. Click on the driver icon → select USB Input
6. Click on Playback Devices in the bottom right corner of your computer → Select DENAFRIPS USB DAC as the default sound card for Windows OS.
7. Driver, finish

Common Troubleshooting

Phenomenon	Solution
A. No sound output	1. Check that all input and output connection cables are properly connected. 2. Check the volume setting of the audio source to ensure that it is not set to mute and that the volume is moderate. 3. Replace the data cable or cables to ensure there is no damage. 4. Make sure the input source is the same as the panel selection. 5. Make sure the unit is not in 'MUTE' state.
B. Noise or murmur	1. Use the power cord and power adapter to ensure stable power supply. 2. Check all connecting cables and interfaces to ensure good contact. 3. Try to avoid placing the DAC in areas with high electromagnetic interference, such as near power lines or wireless devices.
C. sound quality distortion	1. Make sure the sample rate and format of the input signal match the format supported by the DAC. 2. Adjust the DAC's filter and decoder settings to select the appropriate sound quality mode. 3. Check all signal cables and connectors to make sure the connections are firm and undamaged.

Phenomenon	Solution
D. Device cannot be switched on	1. Check that the power cord and power adapter are properly connected, and make sure there is power to the power outlet. 2. Try restarting the DAC, or reconnecting the power supply after a power failure. 3. If the problem persists, you can contact the manufacturer and we provide detailed solutions.
E. Input signal not recognised	1. Ensure that the format and sampling rate of the input signal matches the format supported by the DAC. 2. Check the input connector and connecting wires to make sure there is no damage or poor contact.
F. The computer cannot recognize the USB device.	1. Ensure that the latest USB driver for the DAC is installed. 2. Check the USB cable and port to make sure the connection is good and undamaged. 3. Try replacing the USB cable or using a different USB port.

After-sales instructions

Dear users: Thank you for purchasing our products! In order to ensure that you get the best experience, please read the following after-sales service related instructions carefully.

1. Warranty

①. Warranty period: 1 year free warranty service.
Please provide the serial number on the warranty card when contacting customer support.
Learn More：https://www.denafrips.com/blank-

②. Warranty contents

Phenomenon	Solution
a. Warranty period, the product normal use of non-human factors any product quality or functional problems.	Please contact us or your local agent service centre for repair with the serial number on the warranty card.DENAFRIPS offers free repair or replacement partsservice and covers all shipping costs.
b. The product is out of warranty and there areany problems with the quality or functionality of the product.	DENAFRIPS offers a paid repair service. If replacement parts are required, only the cost price of the parts (labour is free)and the return logistics costs will be charged.

Phenomenon	Solution
c. Problems with product quality or function due to improper use or other human factors.	This situation is not covered by the warranty, DENAFRIPS offers a paid repair service, if replacement parts are required, only the cost price of the parts will be charged, labour is free of charge and the user is responsible for the return shipping costs.

③. WARRANTY PROCESS: DENAFRIPS has about 30 repair outlets around the world, in order to save shipping costs, the official will co-ordinate with the nearest repair outlets to serve you.

④. The following are not covered by the free warranty

a. The product has exceeded the specified warranty period from the date of purchase.
b. The physical product does not match the product model, bar code and date of purchase on the warranty card.
c. The product has been modified or repaired without the authorisation of DENAFRIPS technical staff.
d. Damage caused by human factors (e.g. dropping, impact, immersion in water, fire, etc.).
e. Damage caused by irresistible natural forces (such as earthquakes, floods, lightning strikes, etc.).
f. Damage caused by exceeding the permitted usage environment.
g. Damage caused by incorrect use or improper storage (including but not limited to: excessive voltage caused by wiring or component burns; collision caused by the shell or internal device damage; damage caused by excessive dust; product oxidation or corrosion, etc.).

2. Return Policy

①. Return conditions: Users can apply for a return within 14 days after receiving the product, if the product has quality problems that are not caused by human damage. Return shipping costs will be borne by the merchant. Please ensure that the product appearance is undamaged, complete accessories, packaging intact, and provide proof of purchase.
②. Exchange conditions: During the warranty period, if the product is identified as a quality problem and cannot be repaired, DENAFRIPS will provide an exchange service and bear all the costs.

3. Important Notes

①. Please keep your warranty card, it is very important. The serial number of the warranty card is the same as the serial number of the product, which is used as the evidence to enjoy the after-sales service.
②. For further information about after-sales policy, please visit our website or contact customer support.

Important protective measures to be aware of

warnings

Risk of electric shock inside the unit. Do not open the cover.

- To minimise the risk of electric shock, do not remove the outer cover (or back cover).
- If repairs are necessary, they should be carried out by qualified service personnel.
- To avoid fire and electric shock hazards, do not allow the unit to get wet or damp.

①. **Read Protective Measures**–Before using the equipment, carefully read all warning information in the instruction manual regarding protection and operation.

②. **Follow the instructions for use**–Please follow the operation and use information in the instruction manual, and do not operate in violation of the instruction manual.

③. **Keep away from water and humidity**–Do not place the unit near water, such as bathtubs, washbasins, sinks, washing machines, etc.; and do not use it in high–temperature and high–humidity environments,such as damp basements.

④. **cleanse**–Do not use liquid cleaners and mist cleaners, clean with a dry cloth. Unplug the unit before cleaning.
⑤. **power supply**–Please use the power supply according to the labelling of the product. The wiring should be arranged reasonably, please do not step on the line, pulling the power cord, so as not to cause damage. Pay special attention to the wires of plugs, convenient sockets and equipment connections.
⑥. **Heat Dissipation**—In order to ensure that the product is used reliably, overheating of the device should be avoided, please do not cover cover the device. Do not use the product on surfaces similar to beds, sofas, carpets and other similar surfaces.
If the appliance is installed built–in, such as in a bookcase or on a shelf, make sure there is adequate ventilation. Keep a distance of 10cm (4”) on each side,above and behind the appliance. The rear edge of the appliance bracket or upper cover should be 10cm(4”) away from the rear panel or wall to allow space for ventilation and heat dissipation.
⑦. **Thermal energy**—Keep the product away from heat sources such as radiators, stoves, and other objects that generate heat (including power amplifiers).
⑧. **Prevent foreign objects or liquids**—Please avoid allowing objects or liquids to enter the device through any openings, as contact with live components may cause a fire or electric shock hazard. Do not place this device in environments where it may be exposed to rain or splashing liquids, and avoid placing containers with liquids (such as vases) on the device.

⑨. **Lightning**—During thunderstorms, please unplug the power cord to effectively prevent damage from lightning strikes.
⑩. **Protection**—Disconnect the power plug when the product is not used for a long period of time.
⑪. **protect and maintain**—Users themselves should not open the device's shell to avoid electric shock. In the following cases, if you need repair, please contact the official or professional repair outlets to dismantle the machine.
⑫. **Disconnecting device**—When the plug, appliance coupler, and power switch are used as the disconnecting device, ensure easy operation.

DENAFRIPS

support@denafrips.com
https://www.denafrips.com/
https://www.youtube.com/@DENAFRIPSAudio

Facebook