Quick Start Guide

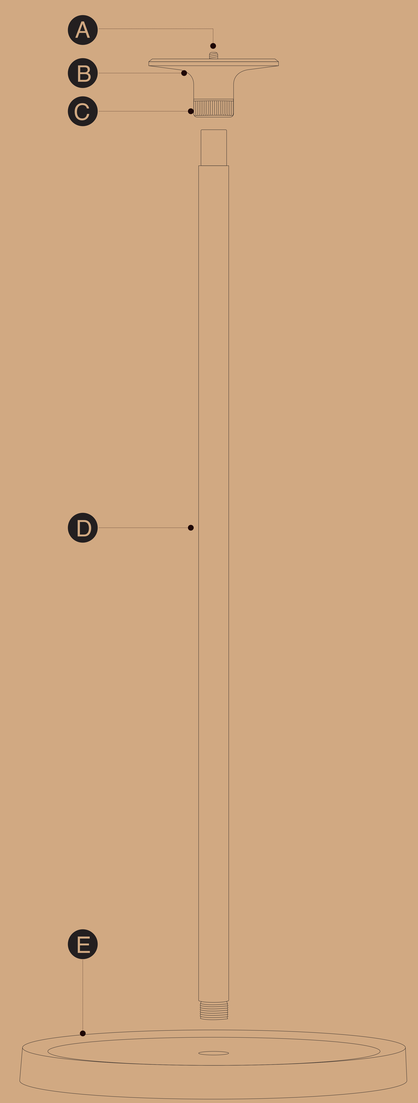

- A 1/4-inch nut
- B Projector mount
- C Knob
- D Support rod
- E Base

1. Position the base in the appropriate location, align the threaded end of the support rod with the center of the base and tighten the rod clockwise.

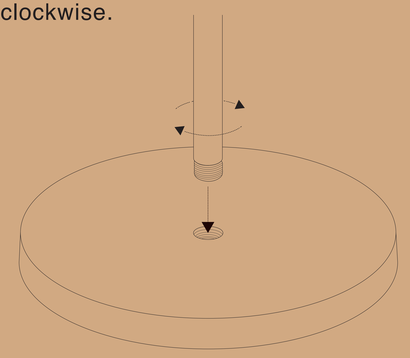

2. Align the threaded hole on the bottom of the projector with the 1/4-inch nut on the projector mount and tighten the projector mount counterclockwise to secure it to the projector.

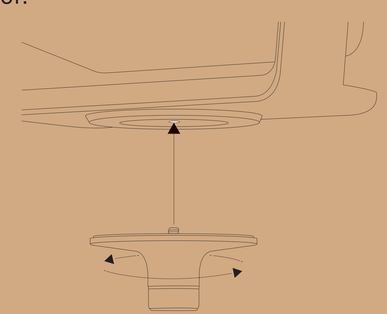

3. Fit the projector mount, with the projector secured, on top of the support rod, and tighten the knob clockwise to complete the assembly.

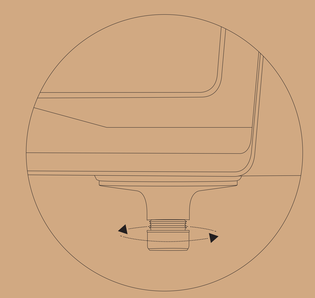

Turn the knob counterclockwise to loosen

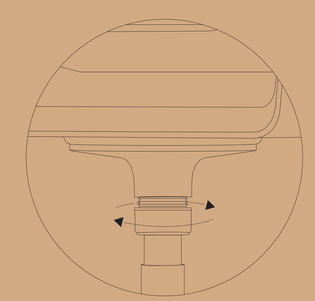
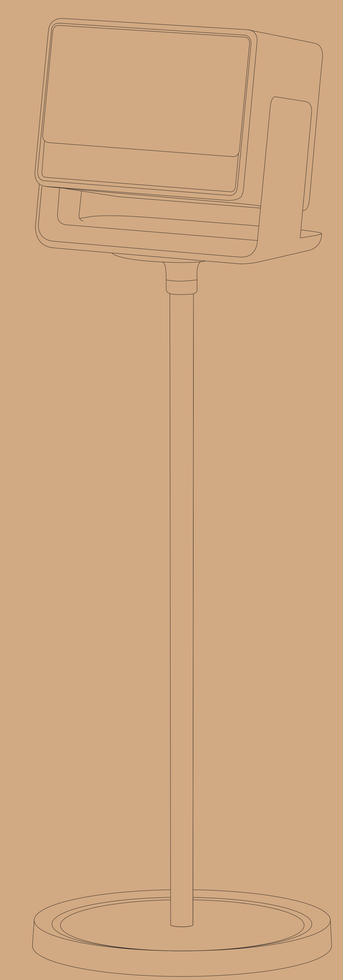
Turn the knob clockwise to tighten